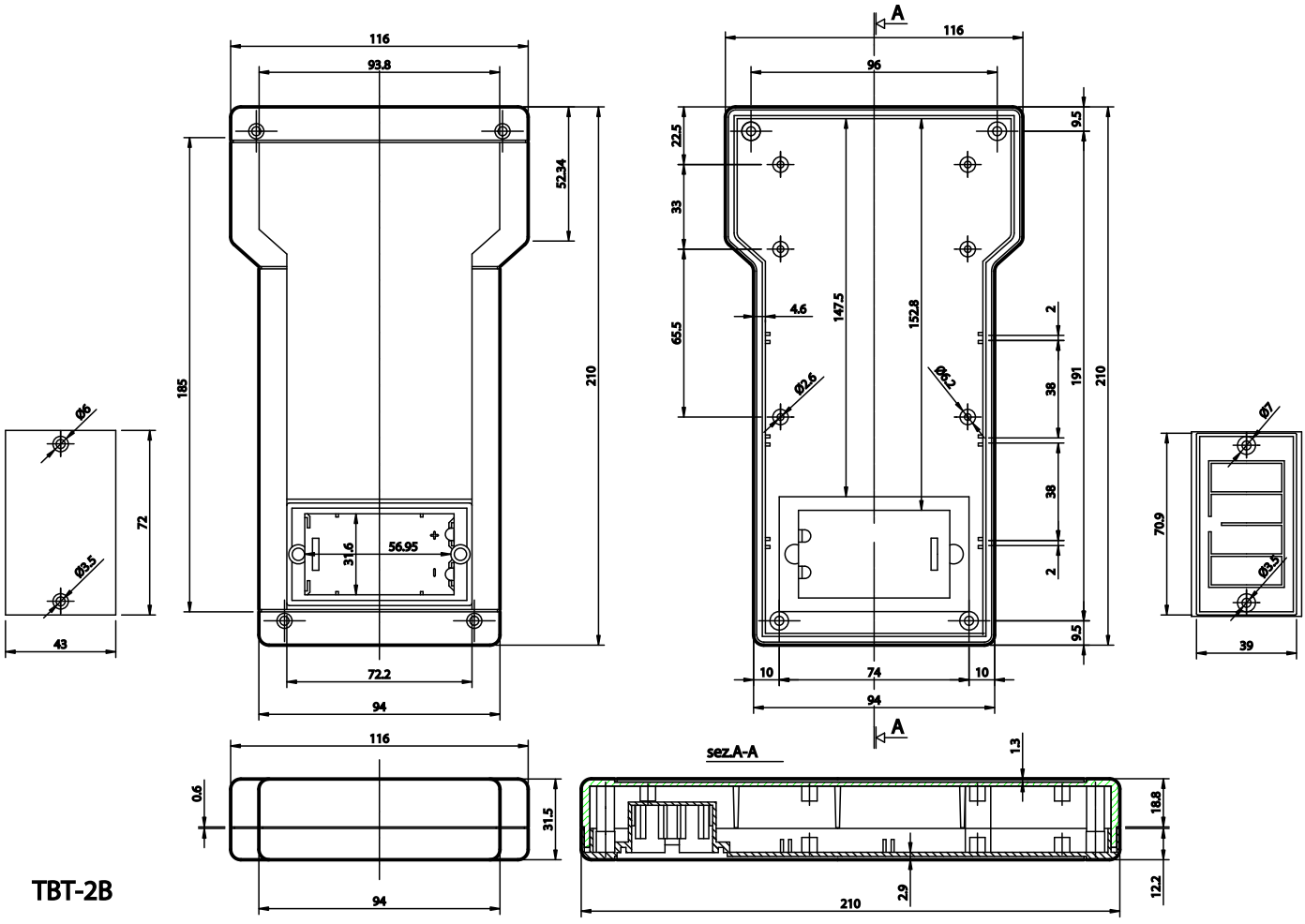
116
93.8
52.34
185
210
72
Ø6
Ø3.5
43
31.6
56.95
+
-
72.2
94
A
96
22.5
33
65.5
4.6
147.5
152.8
Ø2.6
Ø2.9
9.5
2
38
191
10
74
Ø7
70.9
39
0.6
31.5
sez.A-A
1.3
18.8
12.2
2.9

TBT-2B